MANCHE ATLANTIQUE EQUIPEMENTS

# GP5632
## Couteau pare-brise

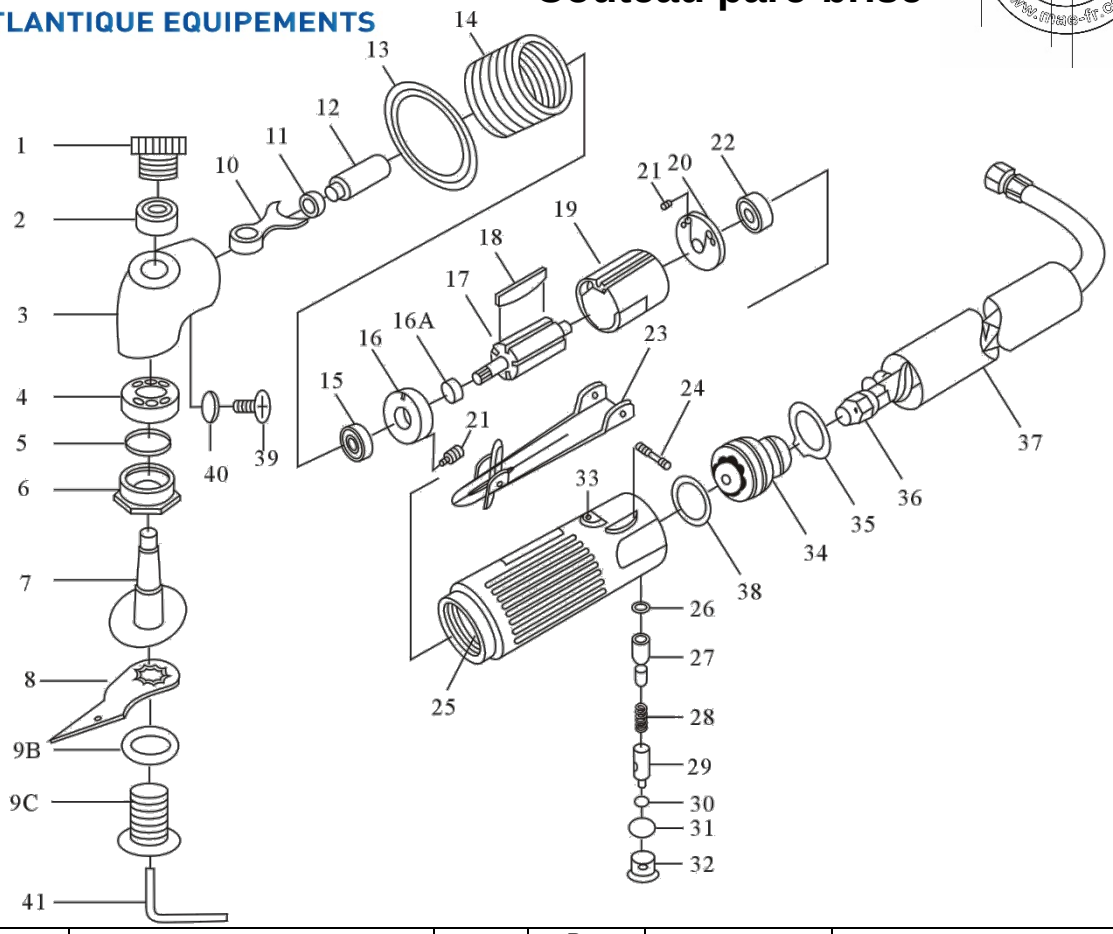


| Rep | Réf | Description | Qté | Rep | Réf | Description | QTE |
|---|---|---|---|---|---|---|---|
| 1 | GP5632-1 | Ecrou | 1 | 21 | GP5632-21 | Goupille | 3 |
| 2 | 607-2RS | Roulement 607 | 1 | 22 | 626-2RS | Roulement 626 | 1 |
| 3 | GP5632-3 | Tête | 1 | 23 | GP5632-23 | Gâchette | 1 |
| 4 | 6900-2RS | Roulement 6900 | 1 | 24 | GP5632-24 | Goupille | 1 |
| 5 | GP5632-5 | Joint | 1 | 25 | GP5632-25 | Corps | 1 |
| 6 | GP5632-6 | Ecrou tête | 1 | 26 | GP5632-26 | Joint | 1 |
| 7 | GP5632-7 | Arbre tête | 1 | 27 | GP5632-27 | Valve | 1 |
| 8 | GP5632-8 | Lame | 1 | 27A | GP5632-27A | Joint | 1 |
| 9A | GP5632-9A | Rondelle arr | 1 | 28 | GP5632-28 | Ressort | 1 |
| 9B | GP5632-9B | Rondelle | 1 | 29 | GP5632-29 | Régulateur | 1 |
| 9C | GP5632-9C | Ecrou serrage lame | 1 | 30 | GP5632-30 | Joint | 1 |
| 10 | GP5632-10 | Fourchette | 1 | 31 | GP5632-31 | Joint | 1 |
| 11 | 607-2RS | Roulement 607 | 1 | 32 | GP5632-32 | Ecrou | 1 |
| 12 | GP5632-12 | Arbre roulement | 1 | 33 | GP5632-33 | Chemise de l'axe valve | 1 |
| 13 | GP5632-13 | Ecrou | 1 | 34 | GP5632-34 | Bloc sotie air | 1 |
| 14 | GP5632-14 | Couronne serrage | 1 | 35 | GP5632-35 | Rondelle | 1 |
| 15 | 6000-2RS | Roulement 6000 | 1 | 36 | GP5632-36 | Flexible | 1 |
| 16 | GP5632-16 | Flasque avt | 1 | 36A | GP5632-36A | Mousse | 1 |
| 16A | GP5632-16A | Rondelle | 1 | 37 | GP5632-37 | Silencieux | 1 |
| 17 | GP5632-17 | Rotor | 1 | 38 | GP5632-38 | Joint | 1 |
| 18 | GP5632-18 | Palette | 4 | 39 | GP5632-39 | Vis | 1 |
| 19 | GP5632-19 | Chemise | 1 | 40 | GP5632-40 | Joint | 1 |
| 20 | GP5632-20 | Flasque arr | 1 | 41 | GP5632-41 | Clé 5 | 1 |


**Manche Atlantique Equipements** -27 parc d'activité du Chalet - 22250 Broons
Tél 02 96 84 65 59 - Fax 02 96 84 77 75
**WWW.MAE-FR.COM**